AGM START-STOP BATTERY

AGM-B21R (12V40Ah)

LEOCH BATTERY

CHARACTERISTICS

Item		Specifications
Nominal Voltage		12V
Nominal Capacity (20HR)		40Ah
Reserve Capacity		61min
Cold Cranking Amps@0°F (-18°C)		330A
Dimension	Length	200.5mm (7.89inches)
	Width	134.5mm (5.30inches)
	Height	224mm (8.82inches)
Approx Weight		12.3kg (27.1lbs)
Terminal		1
Cell layout		1
Hold-Down		B0
Case		Black-PP Material
Cover		Black-PP Material
Handle		TS1

APPLICATIONS

- Car with start-stop system
- EV/HEV
- Engine start

GENERAL FEATURES

- Maximum CCA and life
- Valve regulated technology
- Advanced Absorbed Glass Mat (AGM) technology
- Top-level safety - absolutely no free acid
- 2x Faster Charge Acceptance than conventional starter batteries
- 3x higher cycle life than conventional starter batteries
- Suit for working in partial state of charge operations (PSoC)
- OE quality certification

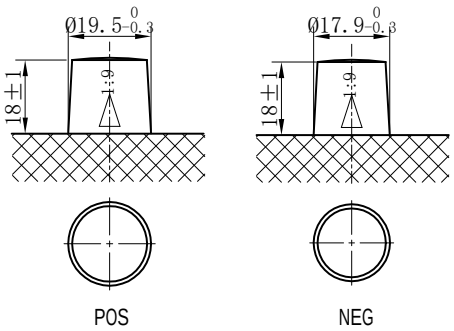

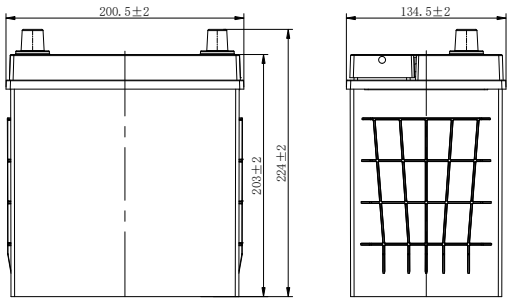

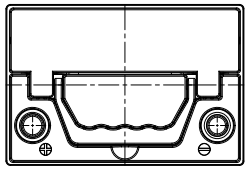

*Values are subject to variation of +/- 5% in normal manufacturing processes.

Leoch International Technology Ltd.
www.leoch.com

Leoch Batteries Pte Ltd
www.leoch.sg

Leoch Battery Corporation
www.leochamericas.com

Leoch Europe S.A.
www.leoch.eu

Data above is recommended and the picture is only for battery effect display, Leoch reserve the final right of explanation.
© LEOCH. All rights reserved.Trademarks and logos are the property of LEOCH and its affiliates unless otherwise noted.Subject to revisions without prior notice. E&OE.

Publication No.:LB-AGM-B21R-PD-EN-V1.1-20250422